CAPITAL STONE, INC.

COUNTERTOPS • FLOORING

Measure Your Own Kitchen

Name: _____

Phone: _____

Example 1 - Kitchen with 4" Backsplash

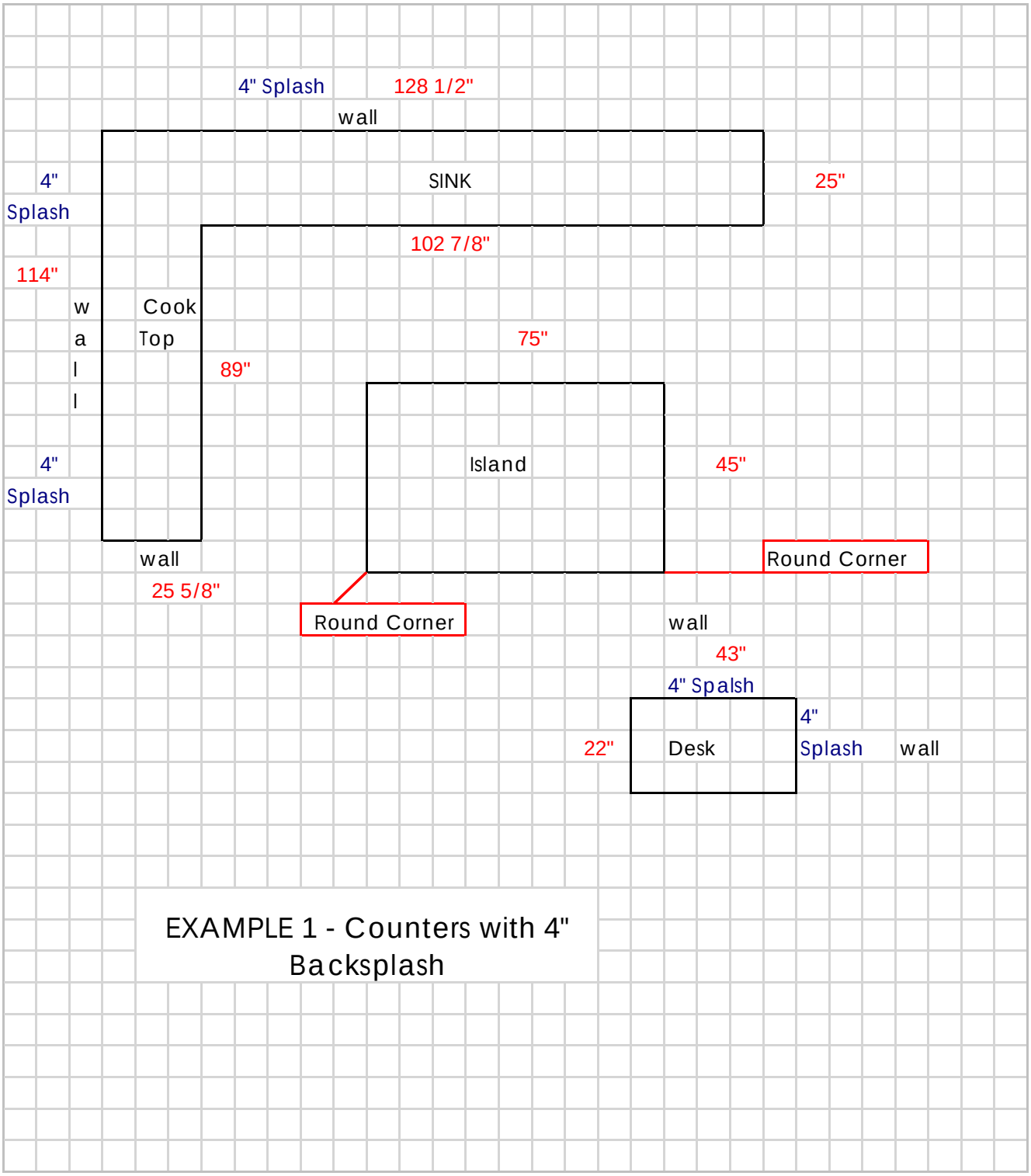

EXAMPLE 1 - Counters with 4" Backsplash